Sustainable Sanitation System

Faculty of Engineering,
University Of Peradeniya,
Sri Lanka.

Abstract

Sanitation facility is among the main living requirements of mankind. It should be more hygienic and easy. Presently, many existing sanitation systems extensively depended on pipe borne water. On the contrary, some parts of the world experiences water scarcity and that has led to un-hygiene sanitation systems. In terms of eco efficiency, even the hygienic sanitation systems have more opportunity to improve. Inefficient water consumption and none usage of nutrients available in excreta in a useful manner are main culprits. Since nutrients available in excreta are not returned to soil breaks the nutrient cycle, end up with less fertile soil which could not directly use for agricultural purposes. We propose sanitation system to minimize pipe borne fresh water usage for flushing and to recover the nutrients available in excreta in a form of organic fertilizer. The proposed system has three focused areas: water saving using vacuum flushing system, Urine and shit separation and digesting mechanism and touch free fertilizer handling system. In order to investigate the economic sustainability of the proposed system, a Life Cycle Costing was done. Based on the LCC outcomes a business model was developed for the proposed sanitation system. Further, to decide the robustness of the system, a failure mode and effect analysis was carried out. Since proposed system facilitate re-usage of black water and digested excreta on biodegradable media as fertilizer while closing the loop of the cycle of nutrients, proposed system can be branded as eco-friendly sanitation system.

Technical Description of the System

The proposed Organic Fertilizer from Human Waste (OFHW) sustainable sanitation system consists of four main functions;

1. Mechanically operated vacuum flushing
2. Excreta and black water separation in the pit (Reducing the moisture level of the excreta)
3. Urine separation at the toilet pan,
4. Digesting of excreta inside the storage tank

In order to facilitate four main functions of the OFHW sanitation system, there are several components and sub systems which are operated an integrated manner.

Components of the system

The main components of OFHW sanitation system consist of,

1. Waste separating toilet pan
2. Water saving vacuum suction system
3. Drainage pit complex with the storage vault and the soakage pit
4. Method for extracting and using the fertilizer.
5. Urine collection and usage
6. Gray water system

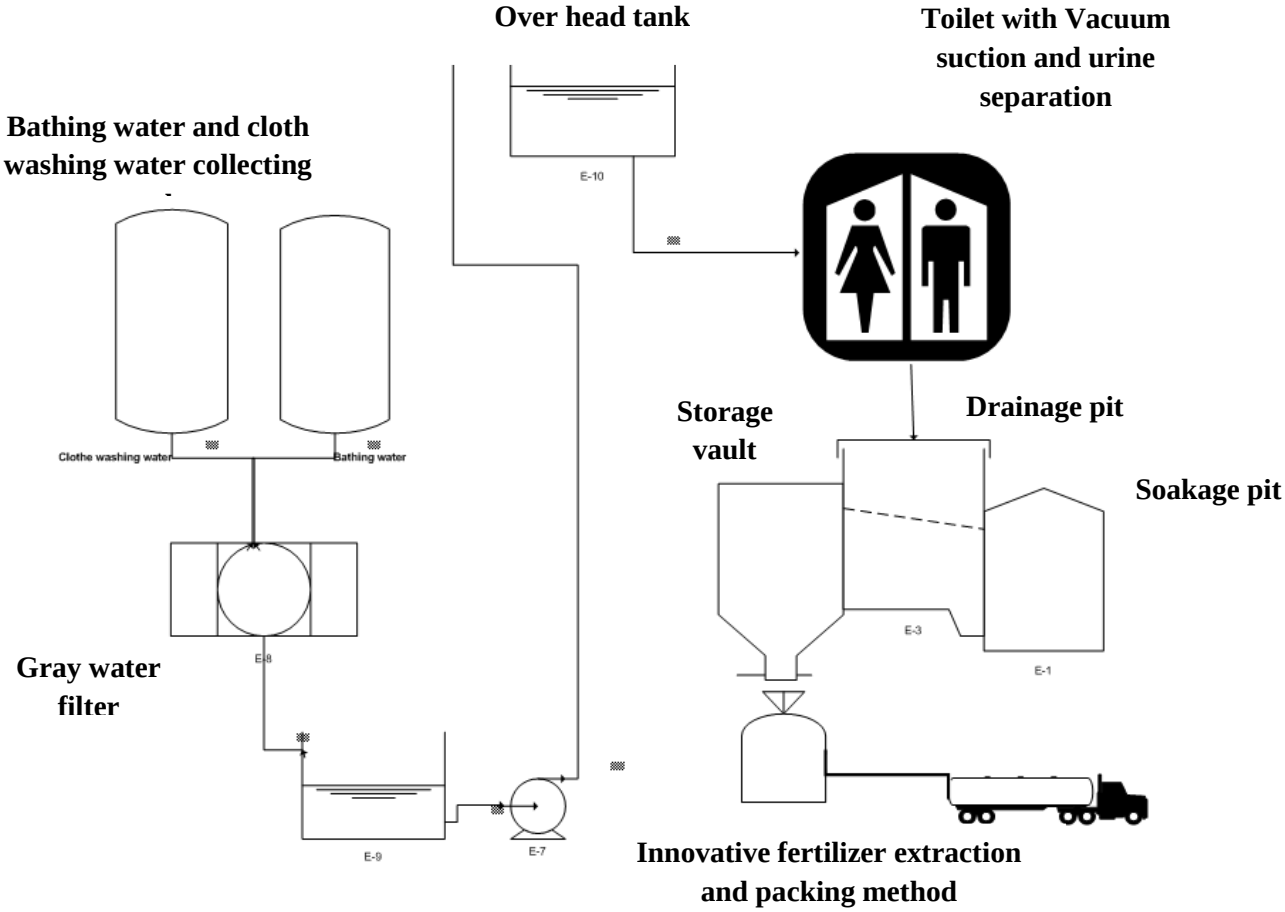

Fig 1. The integrated sanitation system components

As shown in the Fig.1, all the components of the system are connected with each other. The gray water system collects the washing water and run it through a gray water filter. Then the filtered gray water is pumped in to an overhead tank for flushing requirements.

The toilet is a main part of the design. Two main sections of toilet is the vacuum suction system and urine separation. Gray water is pumped to the cistern from the over head tank. Once toilet is used, excreta are flushed using the vacuum created from the manually operated piston-cylinder mechanism. Excreta are flowed in to the drainage pit while urine is separately collected to another tank.

The drainage pit complex consist of several sections: drainage pit with the waste separation mechanism, the soakage pit and the excreta storage vault. The excreta and the black water are separated in the drainage pit and the excreta is pushed in to the storage vault to digest. The soakage pit is to soak the black water in to the soil after internal treating inside the drainage pit.

After 12 months, the fertilizer can be extracted from the bottom side of the storage vault. Innovative and safe extracting and packing methods are introduced to the users.

Waste separating toilet pan

The urine separation facility is inserted in the system. Urine is separated in the toilet pan itself. The pan is designed for squatting. But a sitting toilet pan also applicable in the toilet installation because the vacuum suction system can be applied for both sitting and squatting pans. No ‘S’ trap or bends used in the drainage pipe line, so the excreta is flushed away smooth and fast. The cistern tank for the design is the same as the existing one. In the toilet installation, the existing cistern tank can be used. The system

is designed such a way that after the user flushed the toilet, he/she can flush the cistern like in old times to refill the toilet pan with water. The toilet pan is initially filled with water and after using the toilet the user can flush the water and excreta mixture.

Drainage pit complex

In a normal pit there are two main components. But in the designed sustainable sanitation system, another storage vault has been added in to the system. All together drainage pits, soakage pit and the storage vault creates the pit complex. The pit arrangement and the dimensioning details are given in the appendix-1.

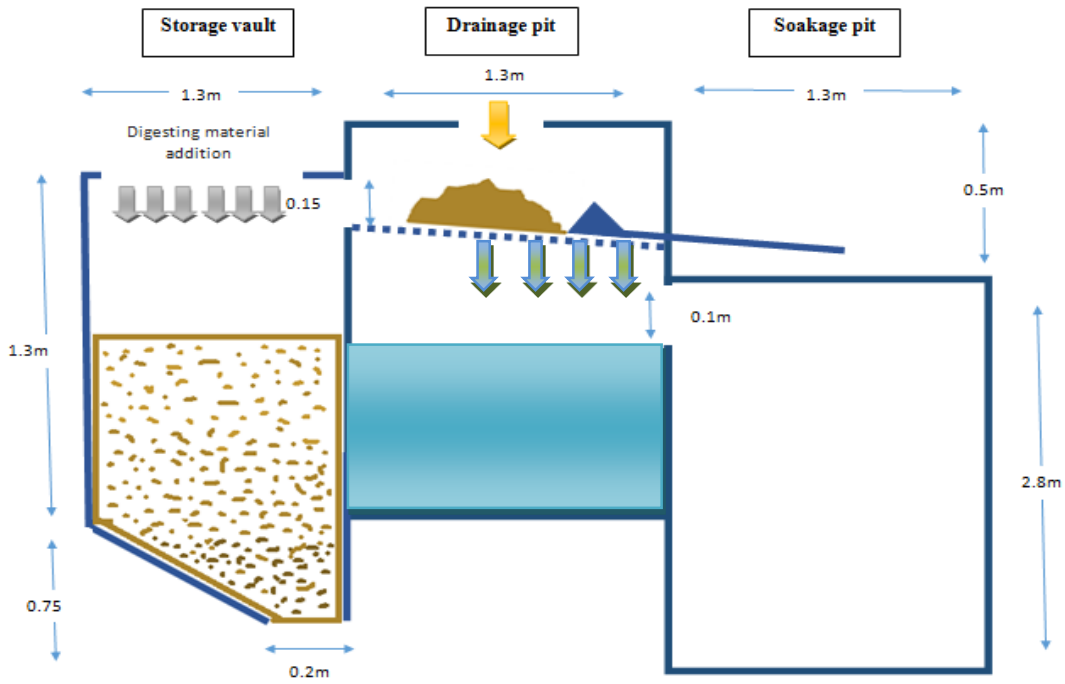

Fig 2. Drainage pit complex

Both solid and liquid waste is coming down the drainage pipe as shown in Fig 2, and the waste is dropped upon a smooth and inclined stainless steel plate with small holes. The black water is separated and flows in to the drainage pit while the solid excreta remain on top of the inclined plane. Likewise excreta are collected during the whole day. At the end of the day by using the pushing lever, the excreta is pushed in to the storage vault, which is next to the drainage pit. After dropping the excreta in to the storage vault, the excreta will digest for 8 to 12 months in it. And the final fertilizer product can be extracted at the bottom of the storage vault. Every time after flushing, the black water level in the drainage pit is increased. But after filling up to 1.8m high the water level is maintained by transferring the excess water in to a soakage pit. The black water is self treated inside the drainage pit by maintaining the water level and when the treated water flow in to the soakage pit, that water is treated enough to soak in to the soil. The soakage pit is a nutrient returning point in the design. Some portion of nutrients in the black water is soaked in to the soil.

Mechanical vacuum suction system for flushing

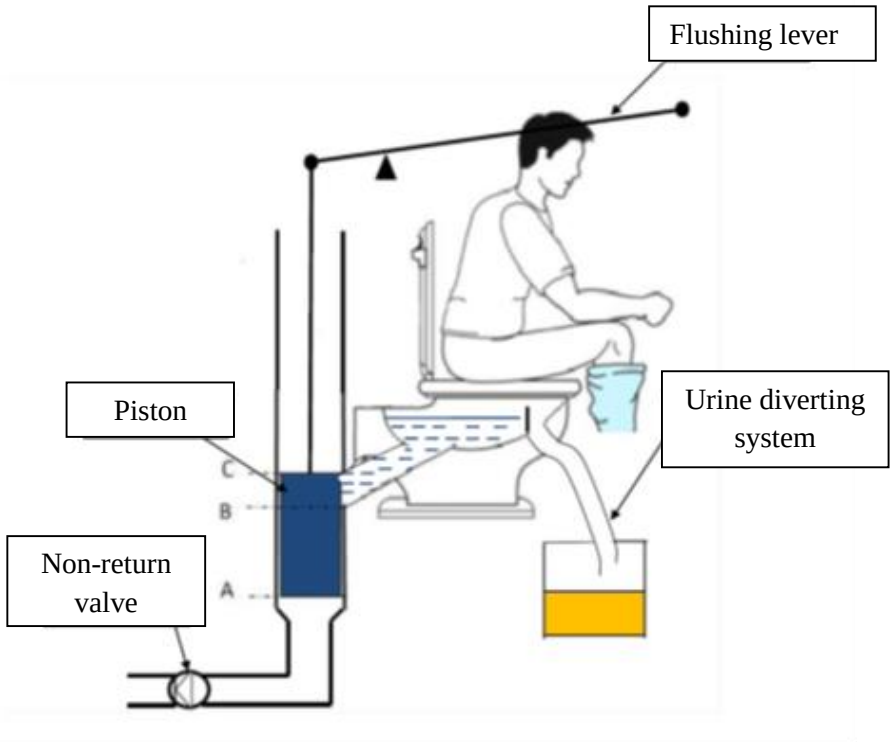

Fig 3. The vacuum suction system

A piston cylinder arrangement can be used to make the vacuum and to transfer the excreta to the drain with water. By making an energy free vacuum system, a sustainable flushing process is achieved. After the waste removal job and the anal cleaning are done, the user can push the flushing lever down until the water and excreta mixture sucked down to the drainage pit. When the flushing lever goes down the piston inside the drainage line is pushed down. Initially this lower end of the piston is at 'A' and it goes up, until position 'B' the drainage pipe from the commode is blocked by the piston. Due to the non-return valve at the bottom end, air is not sucked in through the bottom side as the piston goes up. So due to this scenario, a vacuum is created between 'A' and 'B' positions. When the lower end of the piston passed the point 'B', the commode pipe line is opened and the whole waste mixture inside the commode will be sucked out by the vacuum. The detailed drawings and dimensions of the vacuum suction system is given in appendix- 2. The drawing of the sustainable toilet pan with dimensions is given in appendix -3.

Bill of materials (BOM) of the vacuum system

The bill of material for the vacuum system can express a better idea about the parts in the assembly, types of materials used, with the amounts and their costs. The table 1 shows the bill of materials for the suction mechanism. The mechanism can be assembled with a cost of LKR117, 927.00 with the urine diverting urinal. The bill of materials (BOM) of the vacuum system and the urine diverting toilet pan is given in appendix - 4

A simple working model of the vacuum suction mechanism is developed and tested. The concept of the mechanical vacuum suction is modeled as a prototype. The suction created sufficient vacuum power to

pull the waste out of the pan. A plastic pan is used as the toilet pan in the prototype. Fig 4 shows the pictures of the working model of the vacuum suction system.

Fig 4: Tested working model of the vacuum suction system

Urine collection and usage

There is a urine separation feature in the commode. In the traditional systems in Sri Lanka this urine separation is one of the main features which are used. By separating urine in the beginning and most importantly before urine touches with the excreta, the growth of harmful pathogens will be reduced. Separated urine will be highly concentrated with Ammonia and that is the main constituent of urea; the main fertilizer source to provide N. Separated urine can be stored and used as needed. Before using them as a urea fertilizer, the urine should be diluted by mixing with the water. In the sustainable sanitation system after every flush, when the pan is refilled, the urine partition of the toilet pan is washed with water. Because of that the urine inside the collecting container is diluted. The urine collecting container has a capacity of 20 liters. For a normal family of five members will have nearly 18 liters of urine output per week. The urine container can be removed after every week and apply it to the crops.

The full system can be integrated by connecting all the above components together. This integrated system has several features and practices which will define following issues.

1. Ease of deployment

The system does not have any unnecessary heavy infrastructures. Normally in a home or a public place there is a toilet building or a small room, drainage pit and a soakage pit. The additional structures are the storage vault and the suction mechanism. Suction mechanism can be fitted as a single unit when building the toilet. Structure is almost the same as the existing toilets.

2. Technical adaptation to targeted specific situations

The proposed sanitation system depends on very basic technology. The vacuum suction mechanism is based on piston cylinder arrangement and it is operated manually. Except ceramic water closet, rest of the components can be fabricated and constructed very easily with basic technical input. Even ceramic water closet can be replaced with fiber glass closet which can be even get fabricated at rural areas, but hygiene, appearance and durability will be less. Even maintenance or repairing work can be easily done by ordinary person once adequate and appropriate instructions given in written form.

3. Sociological adaptation to the targeted cultures

This will be one of the great challenges we have to face as local culture is not very much into accept excreta based fertilizer. However there is a potential to market the fertilizer generated from this system as organic material. Currently local farming community has to face many problems due to commercially available chemical fertilizer. Except some sociological and cultural issues to use fertilizer made out from excreta proposed sanitation system will be in a better position.

4. Robustness of the system

The proposed sustainable sanitation system had several possible failure modes at the initial design. The system was evaluated with a Failure mode and effect analysis (FMEA). The identified possible failure causes have been neutralized by taking preventive actions upon the system. Following analysis is done by using the online FMEA tool of IHI (Institute for healthcare improvement). Ranking of the initial failure modes with respect to the RPN values is given in appendix – 5. The initial stage of the FMEA analysis is given in appendix-6.

In Fig 5, the red color is for the high priority failure causes, yellow color is for medium priority causes and the green color is for low priority causes. As shown, lots of high priority failure causes are in the system. Almost all the failure causes are high priority ones. After doing the FMEA, the revised results give less number of high priority failure causes.

Initial **Revised after the FMEA**

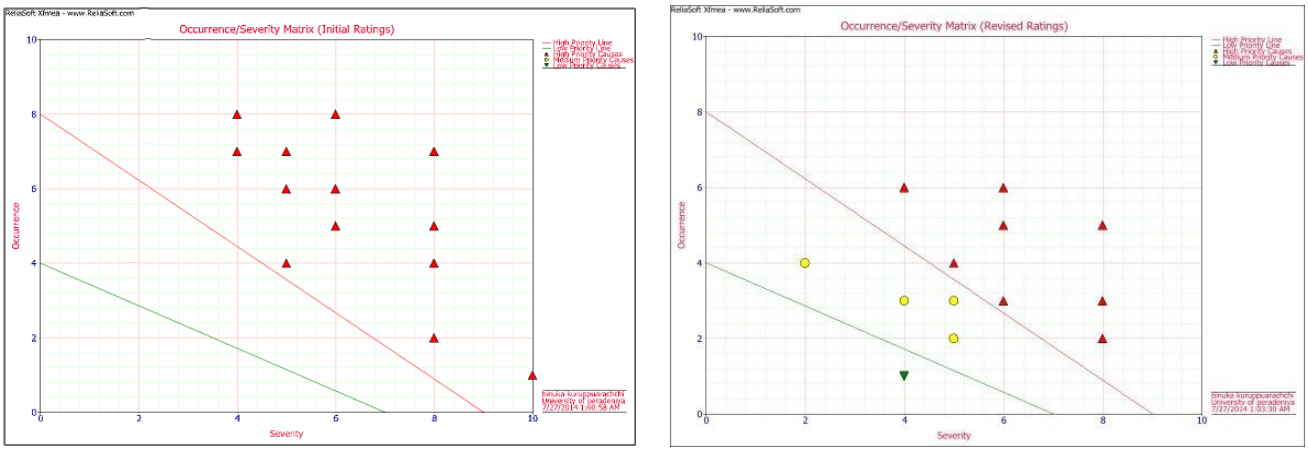

Fig 5. Initial and revised occurrence/ severity matrices (By ReliaSoft Synthesis 9)

The effects of the possible failures have gone down after the FMEA analysis. So the possibility to deviate of the operation from the proposed system is reduced. When the deviation of the proposed system is reduce, the robustness of the system increases.

The high priority failure causes in the revised system are Manual collecting method for the users, the adding mechanism works manually, and the users have to operate it with hand , damages in the water seal ,The time gap between start of refilling and the end of flushing , Friction in the inner surface of the pipes, malfunctioning of the one way valves ,Vacuum leaks in the vacuum system, The time gap between start of refilling and the end of flushing, The separation holes become larger due to wearing or corrosion, creation of extra gaps in the separation plate due to damages in the plate. And the medium priority causes are damages in the water seal, Dried excreta particles on the joint, corrosion in the metal parts, sliding mechanism can be blocked by the material particles, When the materials are added, the excreta storage vault is open to the environment through holes for a short time, Friction is high in piston cylinder mechanism, waste particles go between piston and cylinder walls. And the low priority cause is the toilet pan is not strong enough. At the initial stage all of these causes were high priority causes. The detail FMEA analysis done by using Xfmea tool in ReliaSoft Synthesis 9 software is given in the appendix-7. All the Failure causes, initial and revised occurrences and detection possibilities are given in the report. Initial RPN values and revised RPN values are shown in Fig 6. The RPN value (Risk priority number) is reduced when it comes to the revised stage. Due to the preventive actions, the risk priorities have gone down in every failure cause. Because of that reduction in the RPN value, the system becomes more robust to failures. The highest value of RPN is for the cause “separation plate is not working properly or water leak in to the storage vault”.

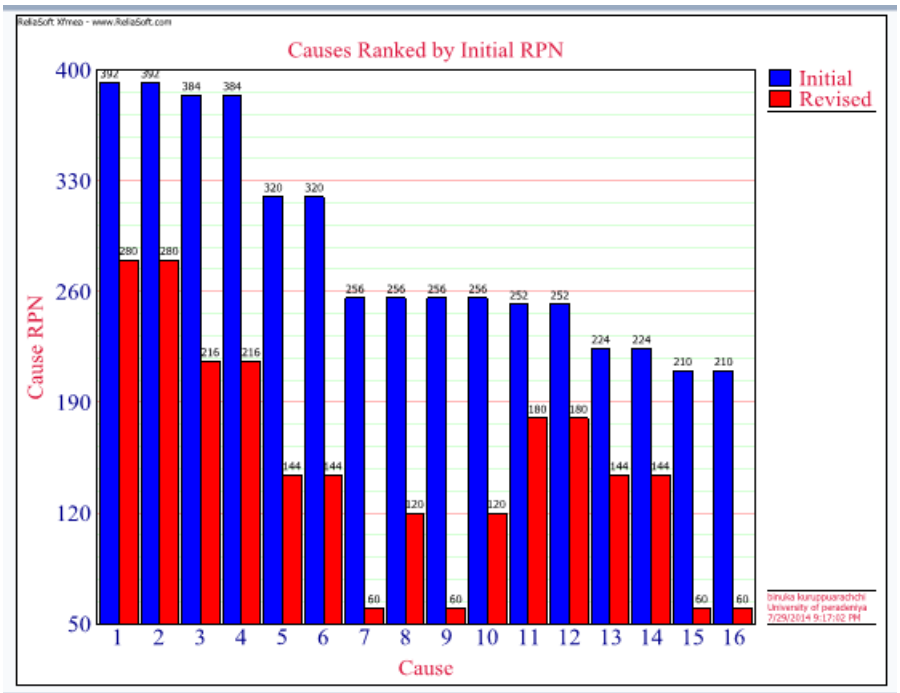

Fig 6. The initial and revised RPN’s of all the failure causes (By ReliaSoft Synthesis 9)

5. Hygiene

Since ceramic water closet is used and water based flushing mechanism is still available hygiene of the sanitation system can be assured. Further, it is proposed to use special device to handle fertilizer made out of excreta. Therefore, any contamination will not happen, even if any pathogens available in the fertilizer. However, that will be very minimal since that is dehydrated for longer period and it mix with ash also.

6. Sustainable sanitation system design

The proposed sustainable sanitation system is sustainable because of three main reasons. They are low use of energy, resource efficiency and have a sustainable business plan. The system is sustainable because of its very low energy usage. Huge amount of electricity is used by all the other vacuum toilets. But in the sustainable toilet the electricity usage for compressor is totally eliminated. And the resource efficiency is higher than the other toilets. The proposed system reduces the fresh water consumption and at the same time it makes use of the waste as a fertilizer. The nutrients which have been extracted from the earth are returned back to the earth as a fertilizer. So the system is sustainable, when considering resource usage.

The fertilizer made using excreta can reduce the usage of chemical fertilizers which are highly toxic and cause further destruction of the soil.

The system can be also named as an investment with the economical sustainability, the cost for the first year with investment and operation will be LKR 407, 571.25 which can be recovered by the gain of LKR1, 533,000.00 after the first year, with a profit. And the rest of the years will be only with a gaining of profit by selling fertilizer made using freely available excreta. This will create indirect employments for the local community.

7. Ergonomics and aesthetics of the system

Collecting and applying fertilizer to the plants

The collected fertilizer can be collected directly to a paper sack (which usually use for packing cement) without the contact with hands. These bags are bio degrading and less in cost where the user can keep stored excess production in the bags itself.

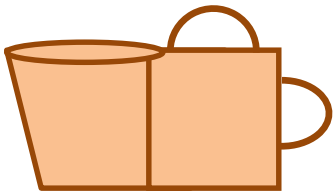

Fig 7: Container which can be used to apply fertilizer to plants

As the figure shows a container made of bamboo can be used to apply fertilizer to the plants this will further reduce the contact of hands with fertilizer. As the container is made of bamboo it is less in cost and bio degrading.

8. Business model for the sustainable sanitation system

People tend to invest capital in any investment if the risks and the valuable returns are clearly identified prior the investment, thus a good business model can attract people to an investment. The most important parts of a business model will be cost and profit categories. These costs should be the addition of costs form point of investment to the place of disposal. Life cycle cost analysis can be done to identify these costs in different phases of the system.

Life cycle cost analysis (LCCA)

LCCA is an economic method of product evaluation in which all costs arising from owning, Operating, Maintaining and ultimately disposing of a product. LCCA provides a significantly better assessment of the long term cost effectiveness than focusing only the initial cost or operating cost of the product. All the costs are calculated here are with the assumption that the generally required piping and the building for the system is provided, which means the costing hereby will expose the additional costs to the new system than an ordinary system. The life span of the proposed system is assumed as 10 years.

Life cycle cost for the proposed sanitation should be an accumulation of all the following costs.

1. Initial Cost (Purchase cost)
2. Infrastructure preparation cost
3. Installation Cost
4. Operation Cost
5. Maintenance Cost
6. Disposal Costs

Initial cost

Initial cost for the sanitation system is the purchasing price of the suction mechanism and the urine diverting pan for the customer. A manufacturer can produce the proposed design for LKR 117,927K (appendix4) and with the transportation and handling cost and manufacturer's profit, the customer can purchase the system for 129K (other costs are assumed as 10% of the price).

Infra-structure preparation cost

The system is designed to work with specially designed pit complex. The pit should be built in the premises of the person who purchase the system. The cost for the pit complex will be LKR 249,373. (Appendix 8) and the grey water tan construction will cost LKR 4734(Appendix 9). Thus the total cost for the infra-structure will be LKR 254,107.

Installation cost

Once the pit is built and the system is flushed the buyer should install the system at their premises. This will create a cost for assembling, testing and installing the system of a buyer. This cost is taken as the cost of hiring a technician for 10 hours. Then the cost for the installation will be LKR 2K.

Operation Cost

The required materials for the operation are mainly water, ash and coir dust. Electricity will be used for pumping water from an underground grey water tank to a tank at the higher level. Ash is freely available, 1kg of coir dust and 1kg of ash should be added daily and the cost for coir dust for 10 years considering inflation is LKR 268,252 and the total cost for electricity for 10 years for the grey water pump is LKR 1319.50. Totally grey water is used for flushing which will make the cost for water zero. (Appendix 10)

Maintenance cost

The total system should be cleaned once for two years also piston and valves and waste separation plate. The cost for cleaning the system will be for the technicians. Technicians will charge LKR 2000 per a service. The piston also should be lubricated using grease twice a year. And also the water seal of excreta pushing lever should be changed twice a year.

Disposal Cost

The system is disposed by using construction parts as landfill and the steel rods and bars as scrap steel. By selling the scrap steel an income also can be earned. The labor cost for the land will be LKR 1500 and the income by the scrap steel will be LKR 1000. Which makes the disposal cost LKR 500?

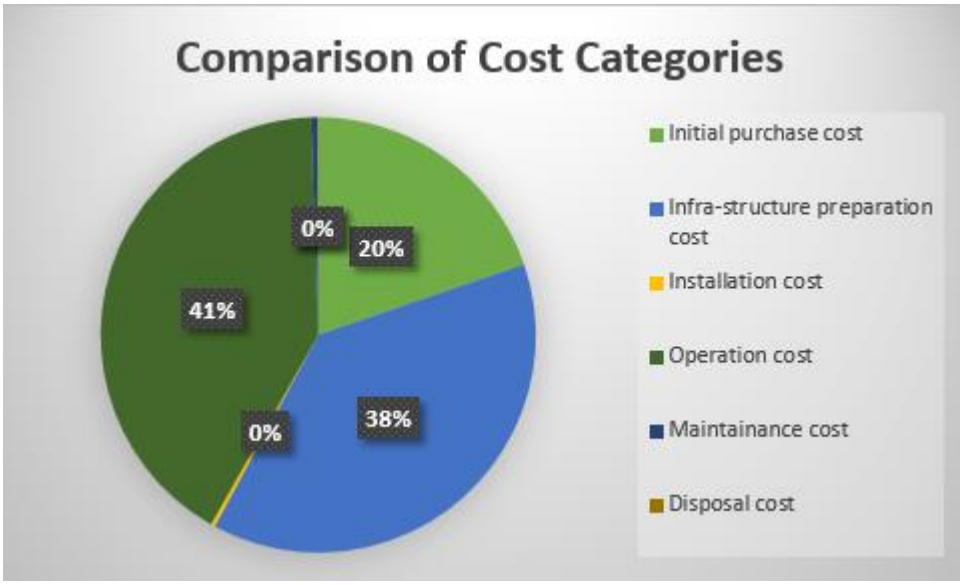

Fig 8: Percentages of costs at different phases

Total life cycle cost

When all the phases are considered for 10 years the total cost of the investment is LKR 642,250. The highest portion of the total life cycle cost which as a percentage, 41% will be occurred as the operation cost. The cost for coir fiber is the reason for this larger percentage. Some countries like Indonesia, Philippines, India, Sri Lanka etc., are having coir dust for free where they can reduce this cost category further.

Value creation

For any investment the profit and the return value creation is important to attract people to the investment.

The buyer can omit the cost they paid for water completely by using grey water from the first day of the installation. The conventional system consumes around 4liters of fresh water [] which will be a saving with the usage of grey water.

After the first year the system is ready to produce fertilizer by digested excreta. It produces 50kg of fertilizer from the excreta [] defecated by a person. As the system is designed for five members of the family. The annual amount of fertilizer generated will be 250kg. Which can be sold to the farmers. The

current price of 1kg of compost fertilizer is LKR 80 and if the fertilizer made by excreta is sold for LKR 60 the income yearly will be LKR15, 000.

The saving of water per year is 21900 liters. The price of a unit of water in Sri Lanka is LKR70 and the money saved with water is LKR 1,533,000.

Thus the income of after the first year will be 1,548,000 which means the total cost of LKR 653,444 can be recovered within after year.

Creation of business opportunities

"Human waste to healthy food – Recycle without touching" is the motto to be used as an inspiring and motivation to the users to adopt the system to the culture.

The system is designed for the domestic use of an ordinary family. Fertilizers made are itself saves a lot of money spent for chemical fertilizers. The excess production of fertilizer can be sold as a business opportunity, which can be done by the domestic users themselves. Fertilizer collecting and selling can be done as a business which will be a good chance for the current chemical fertilizer sellers to in cooperate with.

On the other hand the required digesting materials manufacturing and distributing will create a new production opportunity which will be more profitable as the materials used are cheap and readily available.

The current compost manufacture can used fertilizer formed by human waste as a raw material for their products.

If the suction mechanism is used the maintenance should be done after a period which will create new employment. Someone can even start selling, fixing and servicing firms of sustainable sanitation systems.

Gain and Loss

The ratio between the expenses and the gains by the profit is around 22 where 22 times of return can be observed with respect to the investment. When the above mentioned values are also considered the system gives more gain than the expenses and the losses causing.

Sustainability of the design

The system is both economically and environmentally sustainable as it closes the loop of nutrients by producing fertilizer which can be used for cultivation again and re using urine as a good nitrogen supplement.

As the life cycle cost analysis says, the system recovers the investment cost just after the first harvesting at the end of the first year. For the rest nine years the system will be producing only the profit which shows the economical sustainability of the system.

Appendix- 1

Dimensions of the pit complex

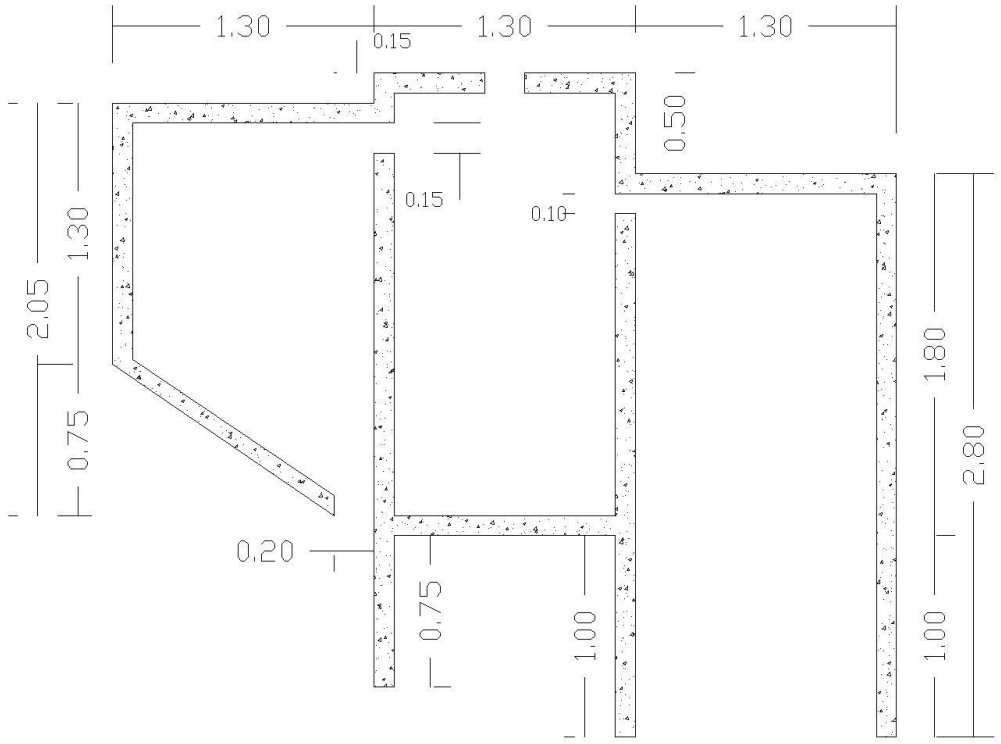

SECTION

Appendix – 2

Machine drawings of the vacuum suction system

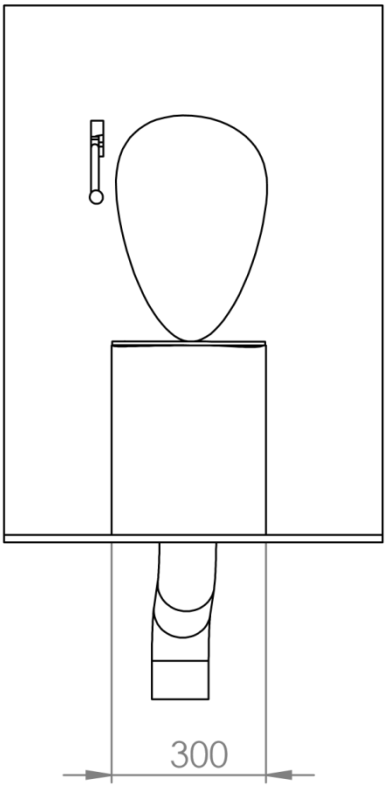

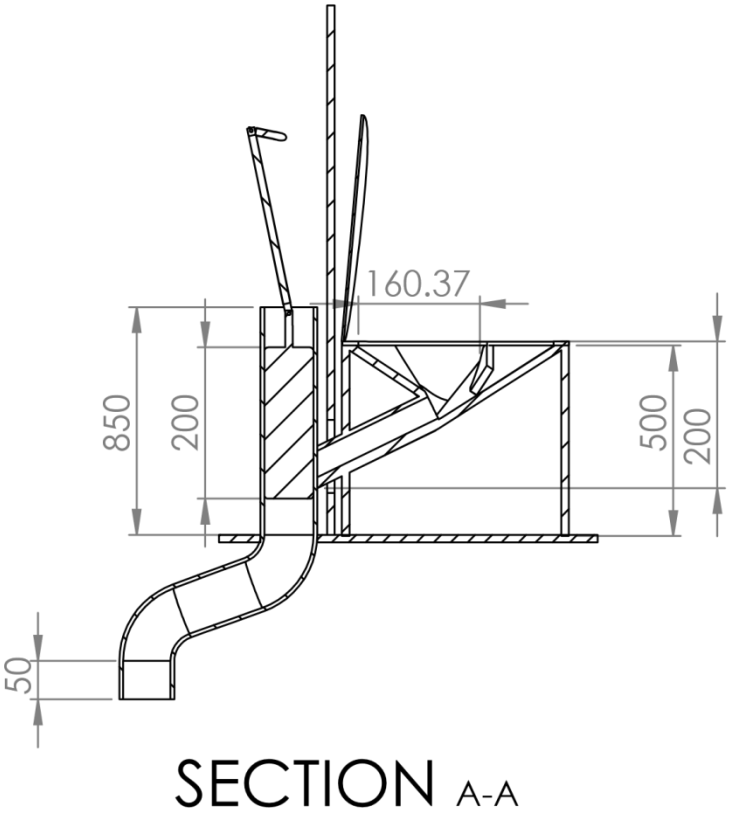

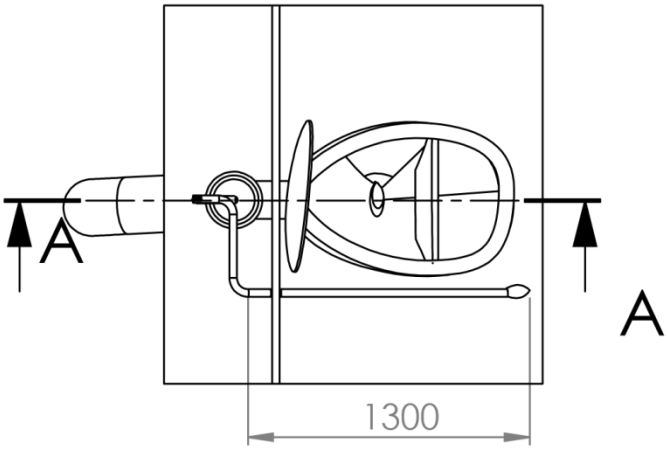

UNLESS OTHERWISE SPECIFIED: DIMENSIONS ARE IN MILLIMETERS SURFACE FINISH: TOLERANCES: LINEAR: ANGULAR:	FINISH:			DEBUR AND BREAK SHARP EDGES	DO NOT SCALE DRAWING	REVISION
	NAME	SIGNATURE	DATE		TITLE:	
DRAWN						
CHK'D						
APPV'D						
MFG						
Q.A				MATERIAL:	DWG NO. Sus-Sani	A4
				WEIGHT:	SCALE:1:10	SHEET 1 OF 1

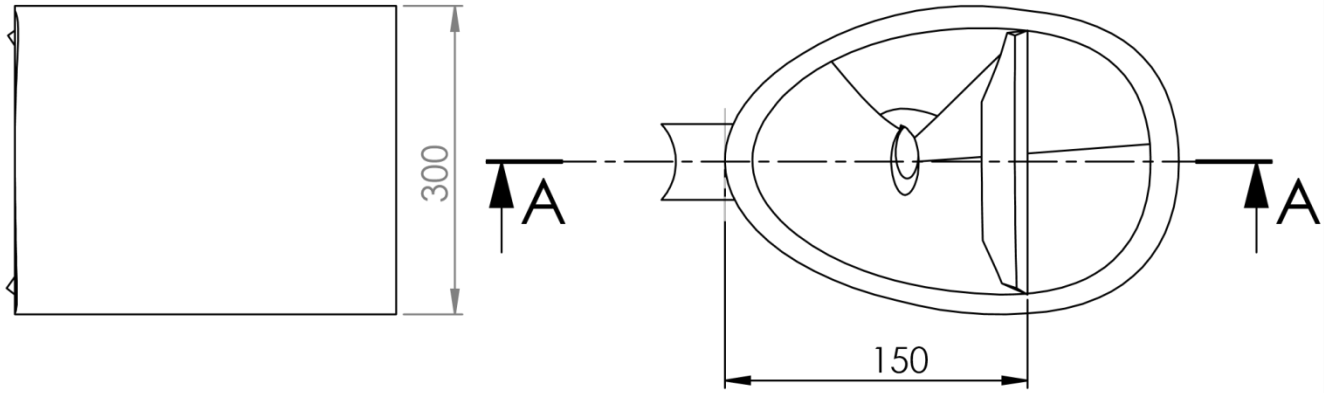

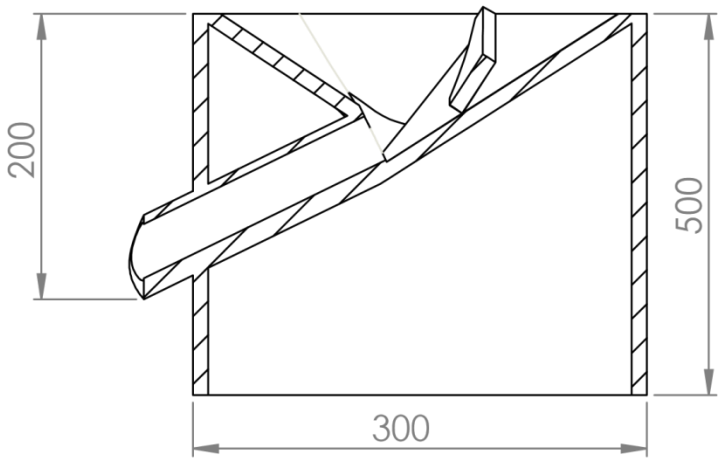

SECTION A-A

SCALE 1 : 5

UNLESS OTHERWISE SPECIFIED: DIMENSIONS ARE IN MILLIMETERS SURFACE FINISH: TOLERANCES: LINEAR: ANGULAR:	FINISH:			DEBUR AND BREAK SHARP EDGES	DO NOT SCALE DRAWING	REVISION
	NAME	SIGNATURE	DATE		TITLE:	
DRAWN						
CHK'D						
APPV'D						
MFG						
Q.A				MATERIAL:	DWG NO. Urin diverting pan	A4
				WEIGHT:	SCALE:1:10	SHEET 1 OF 1

Appendix – 4

Bill of materials for the suction mechanism with the urine diverting toilet pan

Subsystem	Part no:	Part name	Quantity	Market value (LKR)
Mechanical Suction System	M1	Piston O-rings 0.25'	3pcs	180.00
	M2	SS Cylinder 4"	4'	2,800.00
	M3	SS rod 3.7"	1.5'	3,500.00
	M4	steel L bars	24'	1,600.00
	M5	GI pipe 1"	5'	2,500.00
	M6	Steel thread bar	1.5'	900.00
Toilet Pan and Accessories	T5	Ceramic Pan with urine diversion	1pcs	104,017.00
	T6	Plastic Seat	1pcs	
	T7	Water Sisseton	1pcs	
Pipe and Fittings	P8	PVC pipe 2"	4ft	1,200.00
	P9	PVC pipe 3"	3ft	960.00
		PVC Gum	50ml	100.00
		Tread seal 1"	1	50.00
		All-purpose grease	50g	120.00
Total Cost for the materials				117,927.00

Appendix- 5

The failure modes and their initial RPN values, ranked according to the severity

Step	Fail Mode	Occ	Det	Sev	RPN*
5	Partial dehydration of excreta	7	7	8	392
3	pathogens can be releaced to the environment	8	8	6	384
8	Germs can be intract with the users	5	8	8	320
3	Odor can occur during the refilling of toilet pan	8	8	4	256
7	odor coming out of the material adding holes	8	8	4	256
6	pathogens can be released at the lever joint	6	7	6	252
5	Excreta particles mixing with black water	7	8	4	224
6	Odor coming out of the lever joint	7	6	5	210
7	Germs can be intract with the users while material addition	4	6	8	192
6	Lever is too tight to push	6	6	5	180
2	All the waste does not pull out from the toilet pan	5	4	8	160
8	Non-digested excreta particles can be inluded in the final fertilizer	2	7	8	112
7	The material adding lever is not working properly	4	5	5	100
2	The flushing lever is too tight to push	7	2	5	70
4	Excreta blockage in the system	5	2	6	60
1	The toilet pan can be broke during the usage	1	1	10	10

Appendix – 6

Initially identified failure causes, effect and the RPN values

FMEA of the Sus-Sani system

Sri Lanka
Other

To evaluate the Failure modes in sustainable sanitation system.

Process Data

Step	Description
1	Sitting on the toilet pan

Failure Mode	Causes	Effects	Occ	Det	Sev	RPN	Actions
The toilet pan can be broke during the usage	The toilet pan is not strong enough	The user can get injured, The product market will fail due to such collapses	1	1	10	10	Doing a impact test or a quality checking of the product periodically

Step	Description
2	Flushing the toilet

Failure Mode	Causes	Effects	Occ	Det	Sev	RPN	Actions
The flushing lever is too tight to push	Friction is high in piston cylinder mechanism, waste particles go between piston and cylinder walls	The ergonomic of the system will be reduced, The Odor can be increased, Germs can be released to the open environment	7	2	5	70	The flushing lever mechanism can be lubricated using oil or greez periodically, Put "O" rings in the ends of the piston to reduce the hollow area

							between cylinder and piston walls
All the waste does not pull out from the toilet pan	vacuum leaks in the vacuum system, Amount of water used to flush is not enough due to a leak in the cistern	bad odor and spreading of germs	5	4	8	160	Do a vacuum test and a leak proofing test for the cistern and the vacuum suction system

Step	Description
3	The water fill to the toilet pan again

Failure Mode	Causes	Effects	Occ	Det	Sev	RPN	Actions
Odor can occur during the refilling of toilet pan	The time gap between start of refilling and the end of flushing(the pan will not seal quickly enough)	Become harder to use	8	8	4	256	use of a quick return mechanism for flushing lever
pathogens can be released to the environment	The time gap between start of refilling and the end of flushing(the pan will not seal quickly enough)	Hygienic issues	8	8	6	384	addition of a cleaning liquid in to the cistern twice a day

Step	Description
4	Excreta flows through the drainage pipe

Failure Mode	Causes	Effects	Occ	Det	Sev	RPN	Actions
Excreta blockage in the system	Friction in the inner surface of the pipes, Malfunctioning of the one way valves	Bad odor and spreading of germs, due to that the toilet can over flow	5	2	6	60	smooth all the rough edges in the system and reduce the curves in the drainage line as

							much as possible

Step	Description
5	Water separate through the separation layer

Failure Mode	Causes	Effects	Occ	Det	Sev	RPN	Actions
Excreta particles mixing with black water	The separation holes become larger due to wearing or corrosion, creation of extra gaps in the separation plate due to damages in the plate	black water become more pathogenic and harder to treat.	7	8	4	224	Use a material with low rate of wearing, and add a soakage pit to treat the black water inside the pit
Partial dehydration of excreta		excreta become harder to digest, bad odor	7	7	8	392	increase the heat in side the vault by using metallic material for material adding mechanism

Step	Description
6	At the end of the day the collected and dehydrated excreta is pushed away to the storing vault

Failure Mode	Causes	Effects	Occ	Det	Sev	RPN	Actions
Odor coming out of the lever joint	damages in the water seal	become unpleasant to the users	7	6	5	210	Change the water seal after the correct duration of it's life time

Lever is too tight to push	Dried excreta particles on the joint	system become less user friendly	6	6	5	180	Lubricating the water seal properly
pathogens can be released at the lever joint	damages in the water seal	critical health issues, because the user is touching the lever with his hands	6	7	6	252	Facilitate good sun light on the lever joint, Clean the lever and the joint.

Step	Description
7	digesting material addition

Failure Mode	Causes	Effects	Occ	Det	Sev	RPN	Actions
The material adding lever is not working properly	corrosion in the metal parts, sliding mechanism can be blocked by the material particles	The material adding process will take more time and it will expose the excreta to the environment for long time, due to less material addition the digesting time increases	4	5	5	100	use non-corroding material for the mechanism
odor coming out of the material adding holes	When the materials are added, the excreta storage vault is open to the environment through holes for a short time	System become less user friendly and social adoptability will decrease	8	8	4	256	Use a sealed cover for the material adding mechanism
Germs can be intract with the users while material addition	The adding mechanism works manually, and the users have to operate it with hand	Critical health issues, bad reputation on the system due to spreading of illnesses	4	6	8	192	adding a pair of safety glows for the material addition.

Step	Description
8	Extraction of the composted fertilize

Failure Mode	Causes	Effects	Occ	Det	Sev	RPN	Actions
Germs can be interact with the users	Manual collecting method for the users	Social adoptability and the acceptance of the system by the society become low, will cause sever illnesses	5	8	8	320	introduce a innovative safe collecting and packing method
Non-digested excreta particles can be included in the final fertilizer	Not enough time to digest excreta, Partial dehydration of the excreta in the separation stage	Bad odor, reduce the quality of the fertilizer, another cost for after treatment, the fertilizer will not up to the required standard	2	7	8	112	

Appendix – 7

Cause / Effect report for the FMEA analysis

Effect	Component	Failure	Cause	Occ (Init)	Occ (Rev)	Det (Init)	Det (Rev)
Bad odor and spreading of germs, due to that the toilet can over flow	System 1	Excreta blockage in the system	Friction in the inner surface of the pipes, Malfunctioning of the one way valves	5	3	2	2
bad odor and spreading of germs	System 1	All the waste does not pull out from the toilet pan	vacuum leaks in the vacuum system	5	4	4	4
bad odor and spreading of germs	System 1	All the waste does not pull out from the toilet pan	Amount of water used to flush is not enough due to a leak in the cistern				
Bad odor, reduce the quality of the fertilizer, another cost for after treatment, the fertilizer will not up to the required standard	System 1	Non-digested excreta particles can be included in the final fertilizer	Not enough time to digest excreta, Partial dehydration of the excreta in the separation stage	2		7	
Become harder to use	System 1	Odor can occur during the refilling of toilet pan	The time gap between start of refilling and the end of flushing	8	6	8	5
become unpleasant to the users	System 1	Odor coming out of the lever joint	damages in the water seal	7	3	6	4
black water become more pathogenic and harder to treat.	System 1	Excreta particles mixing with black water	The separation holes become larger due to wearing or corrosion, creation of extra gaps in the separation plate due to damages in the plate	7	6	8	6
Critical health issues, bad reputation on the system due to spreading of illnesses	System 1	Germs can be interact with the users while material addition	The adding mechanism works manually, and the users have to operate it with hand	4	2	6	4
critical health issues, because the user is touching the	System 1	pathogens can be released at the lever joint	damages in the water seal	6	5	7	6

lever with his hands							
excreta become harder to digest, bad odor	System 1	Partial dehydration of excreta	<Undefined>	7	5	7	7
Hygienic issues	System 1	pathogens can be released to the environment	The time gap between start of refilling and the end of flushing	8	6	8	6
Social adoptability and the acceptance of the system by the society become low, will cause sever illnesses	System 1	Germs can be interact with the users	Manual collecting method for the users	5	3	8	6
system become less user friendly	System 1	Lever is too tight to push	Dried excreta particles on the joint	6	3	6	4
System become less user friendly and social adoptability will decrease	System 1	odor coming out of the material adding holes	When the materials are added, the excreta storage vault is open to the environment through holes for a short time	8	3	8	5
The ergonomic of the system will be reduced, The Odor can be increased, Germs can be released to the open environment	System 1	The flushing lever is too tight to push	Friction is high in piston cylinder mechanism, waste particles go between piston and cylinder walls	7	4	2	1
The material adding process will take more time and it will expose the excreta to the environment for long time, due to less material addition the digesting time increases	System 1	The material adding lever is not working properly	corrosion in the metal parts , sliding mechanism can be blocked by the material particles	4	2	5	2
The user can get injured, The product market will fail due to such collapses	System 1	The toilet pan can be broke during the usage	The toilet pan is not strong enough	1	1	1	1

Appendix -8

BOQ for the septic tank and soakage pit

BOQ for Septic tank & Soakage pit

Item	Description	Unit	Q'ty	Rate	Amount
1	Excavation in wells / pits in normal earth 1.5m to 3.0m depth inclusive of backfilling behind wall /ring and disposal of surplus earth, rate excluding for shoring.	m3	30.00	820.00	24,600.00
2	Sawn timber formwork in class ii timber for Conctret walls & Slabs.	m2	55.00	1,250.00	68,750.00
3	Mixing and placing in position concrete grade 20, nominal mix 1:2:4 (20mm) using a concrete mixer including fuel / operator / handling.	m3	5.25	17,650.00	92,662.50
4	Tor steel reinforcement bend to shape laid in position and tied with G.I. wire as directed.	Kg	301.00	210.50	63,360.50
	Total cost				**249,373.00**

Signature

T.R. Jayadeera
Project Engineer
Maganeguma Road Projects
Central Province

Appendix- 9

BOQ for the grey water tank

Item	Description	Unit	quantity	Rate(LKR)	Amount(LKR)
1	Excavation of the pit to a depth of 1.2m including backfilling behind walls and disposal of surplus earth.	m^3	1.8	820.00	1476.00
2	Sawn timber formwork in class ii timber for Concrete walls & Slabs.	m^3	5	50.00	275.00
3	Mixing and placing in position concrete grade 20, nominal mix 1:2:4 (20mm) using a concrete mixer including fuel / operator / handling.	m^3	0.1	17,650.00	1765
4	Tor steel reinforcement bend to shape laid in position and tied with G.I. wire as directed.	kg	5.8	210	1218
	Total Cost				4734

Appendix 10

Operation Costs Calculations

Assumptions and other data

- The calculations are done for a family with five members and each member use toilet three times a day.
- Domestically available 0.5hp pump will be using for pumping grey water.
- The water consumption of the chosen pan was 2.5liters (0.66 gal) [http://www.ecovita.net/ekologen.html]
- Inflation rate of Sri Lanka is taken as 6.85% (http://www.gdpinflation.com/2013/05/inflation-rate-in-sri-lanka-from-1988.html)
- Cost variation due to inflation is calculated using an online calculator. (http://www.vertex42.com/ Calculators/inflation-calculator.html)

Cost for pumping grey water

MODEL SX60LD
MAX TOTAL HEAD 145ft
MAX CAPACITY 450gph
PIPE SIZE 1"x1"
POWER 0.5 HP
AMP 2.2
MIDDLE RANGE 72ft/360gph

Specifications of the motor

Calculations

<u>Cost for pumping water</u>

Water requirement for a day	= 0.66 x 3 x 5	= 9.9 gallons
Rate of the motor	=360 gallons per hour	
Motor operated time per day	=9.9/360	= 1.65 minutes
Motor operation time for 10 years	= 1.65 x 365 x 10	= 100.375 hours
Power of the pump		=0.5 hp

No of electricity units for 10 years (kWh) = 0.5 x 0.745 x 100.375= 37.38units

Cost per unit of electricity (average)	= LKR 24
Gross cost for electricity for 10 years = 24 x 37.38	= LKR 898
When inflation of 6.85 % is considered after 10 years	= LKR 1741
Average cost for electricity for 10 years	= LKR 1319.50

<u>Cost for coir dust</u>

Daily consumption of coir dust	= 1kg

Cost for 1kg of coir dust = LKR 50

Gross cost for 10 years =50 x 365x10 = LKR 182 500

When inflation of 6.85 % is considered = LKR 354,004

Average cost for coir dust for 10 years = LKR 268,252

Total cost

Total operation Cost for 10 years = LKR 269,571.00

Average operation cost for a year = LKR22, 464.25

Appendix 11

Costs and gains occurs within ten year of investment

Year	Description	Cost(LKR)	Description	Profit/Gain(LKR)
Year 1	purchase	129,000.00	water saving	1,533,000.00
	Infra structutre	254,107.00	Sales of fertilizer	15,000.00
	Installation	2,000.00		
	Operation cost	22,464.25		
Year 2	Maintainace	2,000.00	water saving	1,533,000.00
	Operation cost	22,464.25	Sales of fertilizer	15,000.00
Year 3	Operation cost	22,464.25	water saving	1,533,000.00
			Sales of fertilizer	15,000.00
Year 4	Maintainace	2,000.00	water saving	1,533,000.00
	Operation cost	22,464.25	Sales of fertilizer	15,000.00
Year 5	Operation cost	22,464.25	water saving	1,533,000.00
			Sales of fertilizer	15,000.00
Year 6	Maintainace	2000	water saving	1,533,000.00
	Operation cost	22,464.25	Sales of fertilizer	15,000.00
Year 7	Operation cost	22,464.25	water saving	1,533,000.00
			Sales of fertilizer	15,000.00
Year 8	Maintainace	2,000.00	water saving	1,533,000.00
	Operation cost	22,464.25	Sales of fertilizer	15,000.00
Year 9	Operation cost	22,464.25	water saving	1,533,000.00
			Sales of fertilizer	15,000.00
Year 10	Maintainace	2000	water saving	1,533,000.00
	Operation cost	22,464.25	Sales of fertilizer	15,000.00
	Disposal Cost	500.00		
	Total Cost	620,249.50	Total Gain	13,932,000.00